English

-A-
1 LCD Display
2 FEED Button
3 PAUSE Button
4 CANCEL Button
5 Front Access Door
6 Top Access Door

-B-
1 Parallel Port
2 USB Type B
3 RS232 Serial
4 Power Switch(O=Off, I=On)
5 AC power connector
6 Ethernet
7 USB Type A
8 Wi-Fi
9 GPIO

-C-
1 Ribbon Pick-up Spindle
2 Ribbon Supply Spindle
3 Media Supply Spindle
4 Feed Slot
5 Thermal Print Head

-D-
1 Thermal Print Head
2 Head Latch
3 Paper Sensor Guide
4 Paper Roller

繁體中文

-A-
1 LCD 液晶螢幕
2 送紙鍵
3 暫停鍵
4 取消鍵
5 前側擋板
6 上側擋板

-B-
1 並列埠
2 USB 埠 Type B
3 RS232 串列埠
4 電源開關(O=Off, I=On)
5 AC 電源連接器
6 乙太網路埠
7 USB 埠 Type A
8 Wi-Fi
9 GPIO

-C-
1 碳帶回收軸
2 碳帶供應軸
3 紙捲供應軸
4 進紙口
5 印字頭

-D-
1 印字頭
2 門閂扣
3 紙張感測器
4 滾軸

简体中文

-A-
1 液晶显示器
2 FEED 进纸键
3 暂停按钮
4 取消按钮
5 前侧挡板
6 上侧挡板

-B-
1 并口
2 USB 口 Type B
3 RS232 串口
4 电源开关 (O=Off, I=On)
5 AC 电源线接口
6 乙太网络端口
7 USB 口 Type A
8 Wi-Fi
9 GPIO

-C-
1 碳带回收轴
2 碳带供应轴
3 纸卷供应轴
4 喂纸槽
5 打印头

-D-
1 打印头
2 门挡扣
3 纸张传感器
4 滚轴

Español

-A-
1 Pantalla LCD
2 Boton Alimentacion
3 Boton PAUSE
4 Boton Cancelacion
5 Acceso de la puerta delantera
6 Acceso de la puerta superior

-B-
1 Paralelo
2 USB Type B
3 Serial RS232
4 Interruptor de encendido (O = Off, I = A)
5 Conector de alimentación AC
6 Ethernet
7 USB Type A
8 Wi-Fi
9 GPIO

-C-
1 Eje adopcion ribbon
2 Suministro de Ribbon
3 Soporte para suministro de papel
4 Ranura de Alimentacion
5 Cabezal Termica

-D-
1 Cabezal Termica
2 Cierre
3 Guia de Papel
4 Rodillo arrastre

Français

-A-
1 Affichage LCD
2 Feed Button
3 Bouton de PAUSE
4 Bouton d'annuler
5 Panneau de devant
6 Panneau principal

-B-
1 Parallèle
2 USB Type B
3 Serial RS232
4 Power switch (O = Off, I = On)
5 Connecteur de pouvoir(AC)
6 Ethernet
7 USB Type A
8 Wi-Fi
9 GPIO

-C-
1 Fuseau de Ruban reprise
2 Fuseau de Provision de Ruban
3 Papier de rouleau de support
4 Support pour provision de papier
5 Tête d'Empreinte Thermique

-D-
1 Tête d'Empreinte Thermique
2 Verrou de tête
3 Guide de Capteur de Papier
4 Rouleau

Deutsch

-A-
1 LCD-Display
2 Vorschub Taste
3 Pause Taste
4 Abbruch Taste
5 Vordere Zugangsklappe
6 Obere Zugangsklappe

-B-
1 Paralleler Anschluß
2 USB Type B
3 RS232 seriell
4 Netzschalter (O = AUS, I = An)
5 Netzteil-Anschluss
6 Ethernet
7 USB Type A
8 Wi-Fi
9 GPIO

-C-
1 Karbonbandaufnahmespindel
2 Mediaspindel Karbonbandabrollspindel
3 Etikettenrollenhalter
4 Vorschub Slot
5 Thermo Duckkopf

-D-
1 Thermal Druckkopf
2 Sprengring
3 Etikettenführung
4 Andruckrolle

Português

-A-
1 Display LCD
2 Botão de Feed
3 Botão de pausa
4 Botão de cancelar
5 Porta de acesso fronteiro
6 Porta de acesso acima

-B-
1 Paralela
2 USB Type B
3 Sérial RS232
4 Interruptor (O= Desligar, I = Ligar)
5 Corrente de Adaptador.
6 Ethernet
7 USB Type A
8 Wi-Fi
9 GPIO

-C-
1 Enrolador de Filme
2 Suporte do rolo de filme
3 Suporte do rolo de papel
4 Abertura de entrada de papel
5 Cabeça de impressão

-D-
1 Cabeça de impressão
2 Trinco
3 Guia do papel
4 Rolo de tração

Italia

-A-
1 Display LCD
2 Pulsante salto etichetta
3 Pulsante PAUSA
4 Pulsante CANCELLA
5 Pannello accesso frontale
6 Pannello accesso principale

-B-
1 Porta Parallela
2 USB Type B
3 Seriale RS232
4 Interruttore accensione (O = Off , I = On)
5 Connettore di alimentazione AC
6 Ethernet
7 USB Type A
8 Wi-Fi
9 GPIO

-C-
1 Supporto avvolgimento nastro carbografico
2 Supporto svolgimento nastro carbografico
3 Supporto rotolo carta
4 Sportello posteriore
5 Testina Termica

-D-
1 Testina Termica
2 Chiusura Testina
3 Sensore Guida Carta
4 Rullo stampa

Türkçe

-A-
1 LCD ekran
2 İlerletme düğmesi
3 Bekletme Düğmesi
4 İptal Düğmesi
5 Ön giriş kapağı
6 Üst giriş kapağı

-B-
1 Paralel Port
2 USB girişi B tipi
3 Seri Port Girişi
4 Açma/Kapatma Düğmesi
5 Adaptör Girişi
6 Ethernet Girişi
7 USB girişi A tipi
8 Wi-Fi
9 GPIO

-C-
1 Ribbon toplama tutamacı
2 Ribon kaynağı tutamacı
3 Etiket kaynak çubuğu
4 Harici Etiket Besleme Yuvası
5 Termal Kafa

-D-
1 Termal Kafa
2 Kafa mandalı
3 Etiket sensor tutamacı
4 Kauçuk silindir

Russian

-A-
1 LCD дисплей
2 Кнопка подачи ленты
3 Кнопка "Пауза"
4 Кнопка "Отмена"
5 Передняя крышка
6 Верхняя крышка

-B-
1 Параллельный (LPT) порт
2 Порт USB типа B
3 Порт RS-232
4 Кнопка включения (O=выключено, I=включено)
5 Разъем подключения электропитания (сетевого кабеля)
6 Порт Ethernet
7 Порт USB типа A
8 Wi-Fi
9 GPIO

-C-
1 Ось приемной катушки риббона
2 Ось катушки подачи риббона
3 Ось катушки подачи этикетленты
4 Лоток подачи ленты
5 Печатающая головка

-D-
1 Печатающая головка
2 Защелка печатающего механизма
3 Направляющая датчика этикетки
4 Прижимной вал

Bahasa Indonesia

-A-
1 Layer LCD
2 Tombol Maju
3 Tombol Tunda
4 Tombol Batal
5 Depan Pintu Akses
6 Atas Pintu Akses

-B-
1 Port Parallel
2 USB Type B
3 Serial
4 Saklar Power (O=Mati, I=Hidup)
5 Konektor Power AC
6 Ethernet
7 USB Type A
8 Wi-Fi
9 GPIO

-C-
1 Kumparan Pengangkat Pita/Ribbon
2 Kumparan Pemasuk Pita/Ribon
3 Kumparan Pemasuk Media/Bahan
4 Slot Maju
5 Print Head Thermal

-D-
1 Print Head Thermal
2 Kepala Kait
3 Panduan Sensor Kertas
4 Pengguling Kertas

ARGOX
a SATO company

The user is cautioned that any changes or modifications not recommended by Argox Information Co. Ltd. could result in the loss of the user's authority to operate the equipment. To ensure compliance, the users must use accessories and peripherals approved by Argox Information Co. Ltd.

Supplemental Information: This device complies with the requirement of FCC Part 15 Rules. Operation is subject to the following two Conditions:
(1) This device may not cause harmful interference and
(2) this device must accept any interference received, including interference that may cause undesired operation.

INDUSTRY CANADA NOTICE:
This device complies with Industry Canada ICES-003 class A requirements.
Cet equipement est conforme a ICES-003 classe A de la norm Industrielle Canadian.

EMC: EN 55032:2012/AC:2013
EN 55024:2010 + A1:2015

Argox Information Co., Ltd certifies that the following products and/or components are compliant with the current requirements of the European Union Restriction on the use of Hazardous Substances (RoHS) Directive, 2011/65/EU.

警告使用者:
這是甲類的資訊產品，在居住的環境中使用
時，可能會造成射頻干擾，在這種情況下，
使用者會被要求採取某些適當的對策。

CAUTION: Risk of Explosion if Battery is replaced by an Incorrect Type. Dispose of Used Batteries According to the Instructions.

ATTENTION: Risque d'explosion si la batterie est remplacée par un type incorrect. Mettre au rebus les batteries usagées selon les instructions.

Argox Information Co., Ltd.
8F., No. 28, Baogao Rd., Xindian Dist.,
New Taipei City 231029, Taiwan (R.O.C.)
Tel: +886-2-8912-1121 Fax: +886-2-8912-1124
https://www.argox.com
https://www.youtube.com/user/argoxmkt
email:service@argox.com

Copyright © 2022. Argox Information Co.Ltd., All Rights Reserved.

設備名稱：條碼印表機 Equipment name						型號（型式）：ME-250 Type designation (Type)
	限用物質及其化學符號 Restricted substances and its chemical symbols					
單元Unit	鉛Lead (Pb)	汞Mercury (Hg)	鎘 Cadmium (Cd)	六價鉻 Hexavalent chromium (Cr+6)	多溴聯苯 Polybrominated biphenyls (PBB)	多溴二苯醚 Polybrominated diphenyl ethers (PBDE)
印刷電路板組件	–	○	○	○	○	○
機殼	–	○	○	○	○	○
線材	○	○	○	○	○	○
電源器	–	○	○	○	○	○
印字頭模組	–	○	○	○	○	○

備考1. "超出0.1 wt %" 及 "超出0.01 wt %" 係指應用物質之百分比含量超出百分比含量基準值。
Note 1: "Exceeding 0.1 wt %" and "exceeding 0.01 wt %" indicate that the percentage content of the restricted substance exceeds the reference percentage value of presence condition.

備考2. "○" 係指該項限用物質之百分比含量未超出百分比含量基準值。
Note 2: "○" indicates that the percentage content of the restricted substance does not exceed the percentage of reference value of presence.

備考3. "–" 係指該項限用物質為排除項目。
Note 3: The "–" indicates that the restricted substance corresponds to the exemption.

ARGOX
a SATO company

iX6-Series
Printers Quick Installation Guide

快速安裝指南
快速安裝指南
Guía Rápída
Rapide guide
Bedienerhandbuch
Guia de Ajuda Rápida
Guida Rapida
Mini Kılavuzu
Руководство по быстрой установке
Pedoman Penginstalan Cara Cepat
Hızlı Kurulum Kılavuzu

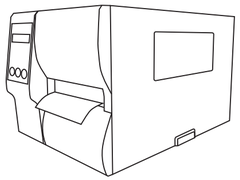

Part No: 49-IX601-002
Revision Date: July. 2022

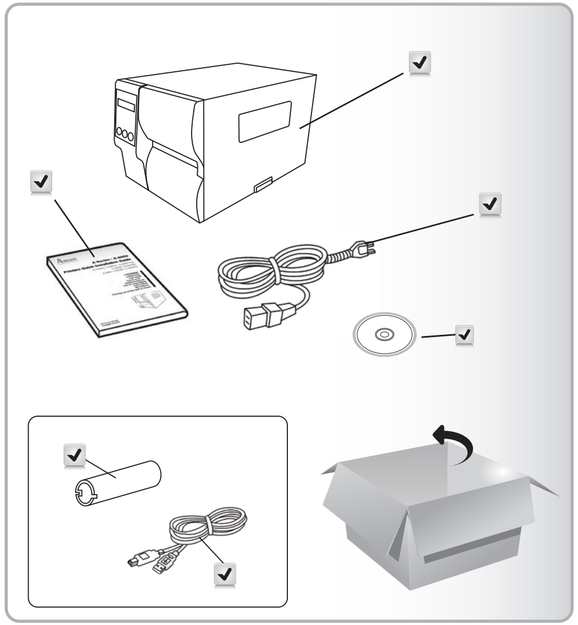

A

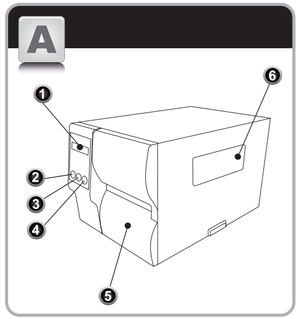

C

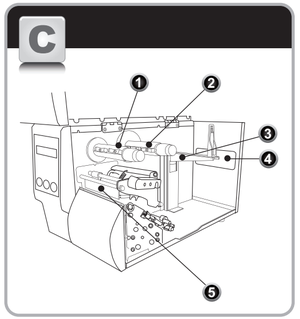

D

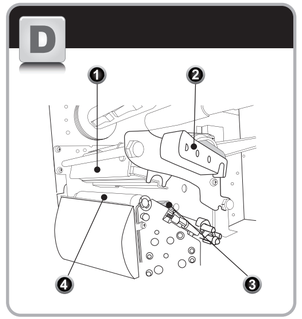

B

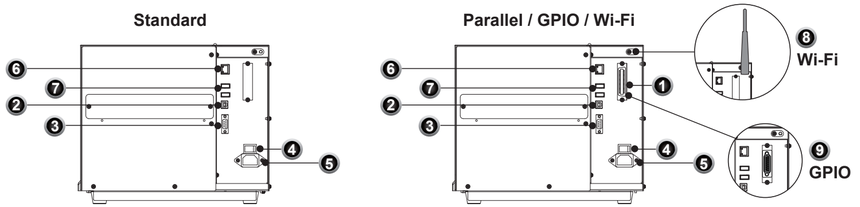

Loading Ribbon
碳帶安裝
碳带安装
Instalación de cinta
Chargement de ruban
Laden des druckbandes
Instalação de ribbon
Caricamento nastro
Ribon takma
Установка риббона
Pasang Pita/Ribbon
Ribon Takma

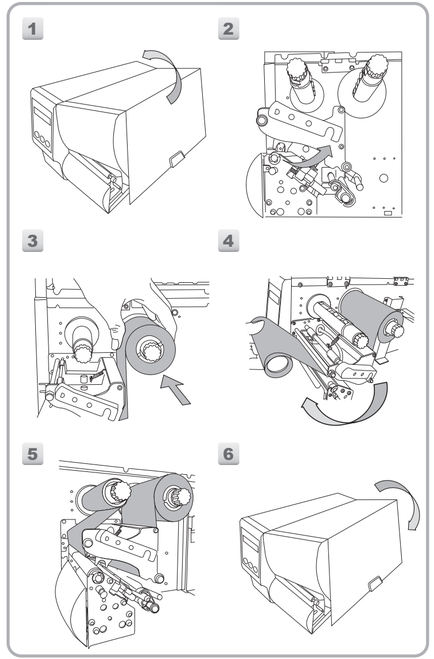
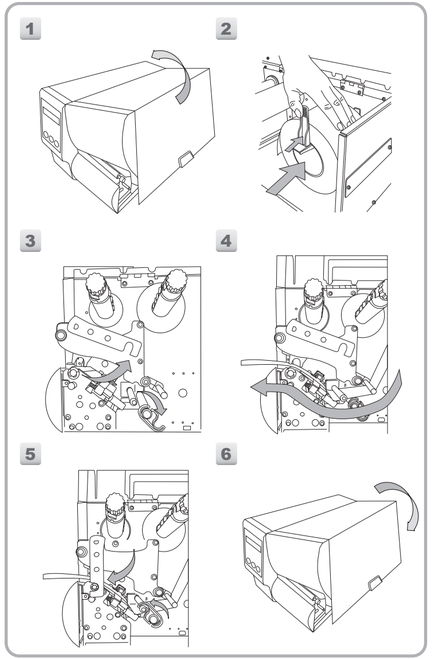
Loading Media
紙捲安裝
纸卷安装
Instalación de papel
Chargement de papier
Laden des labelmaterials
Instalação de etiquetas
Caricamento carta
Baskı malzemesini takma
Установка этикет-ленты
Pasang Bahan/Media
Etiket Takma